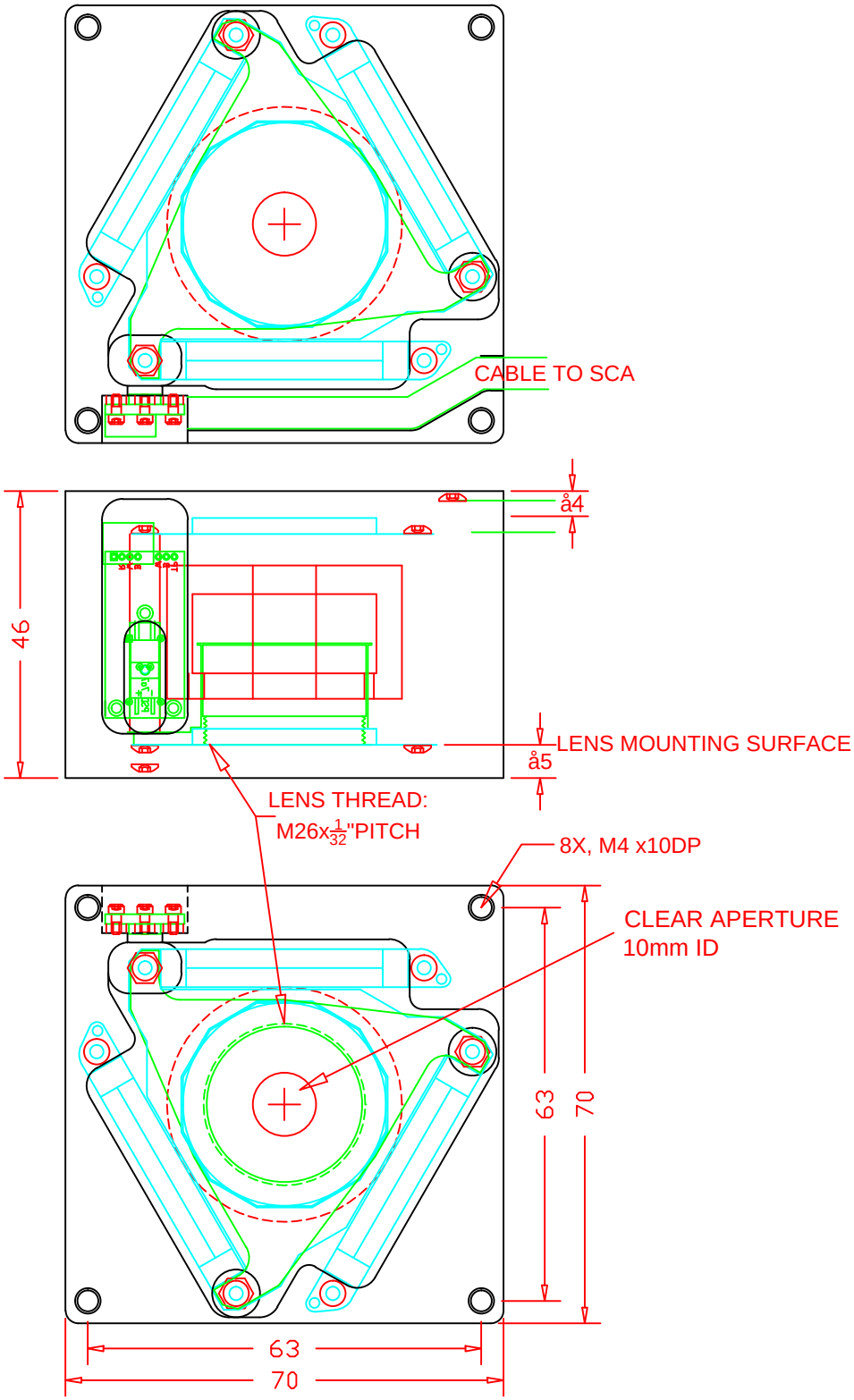

NOTES:

TOLERANCES	Interpret per ANSI Y14.5M Do Not Scale Drawing	Equipment Solutions, Inc.	
Fraction ± 1/8 X.X ± 0.03 X.XX ± 0.01 X.XXX ± 0.003 Angular ± 1°	mm DIMENSIONS		
	APPROVALS DATE Engineer: JK 2/09/11	LFA-0603-HM PRELIMINARY INTERFACES	
Surf. Finish 32 Break corners & edges 0.015 max	MATERIAL: See Notes FINISH: See Notes	Dwg# LFA_12_8A7.dwg	
		Size A	Scale: 1X	SHEET 1 of 1